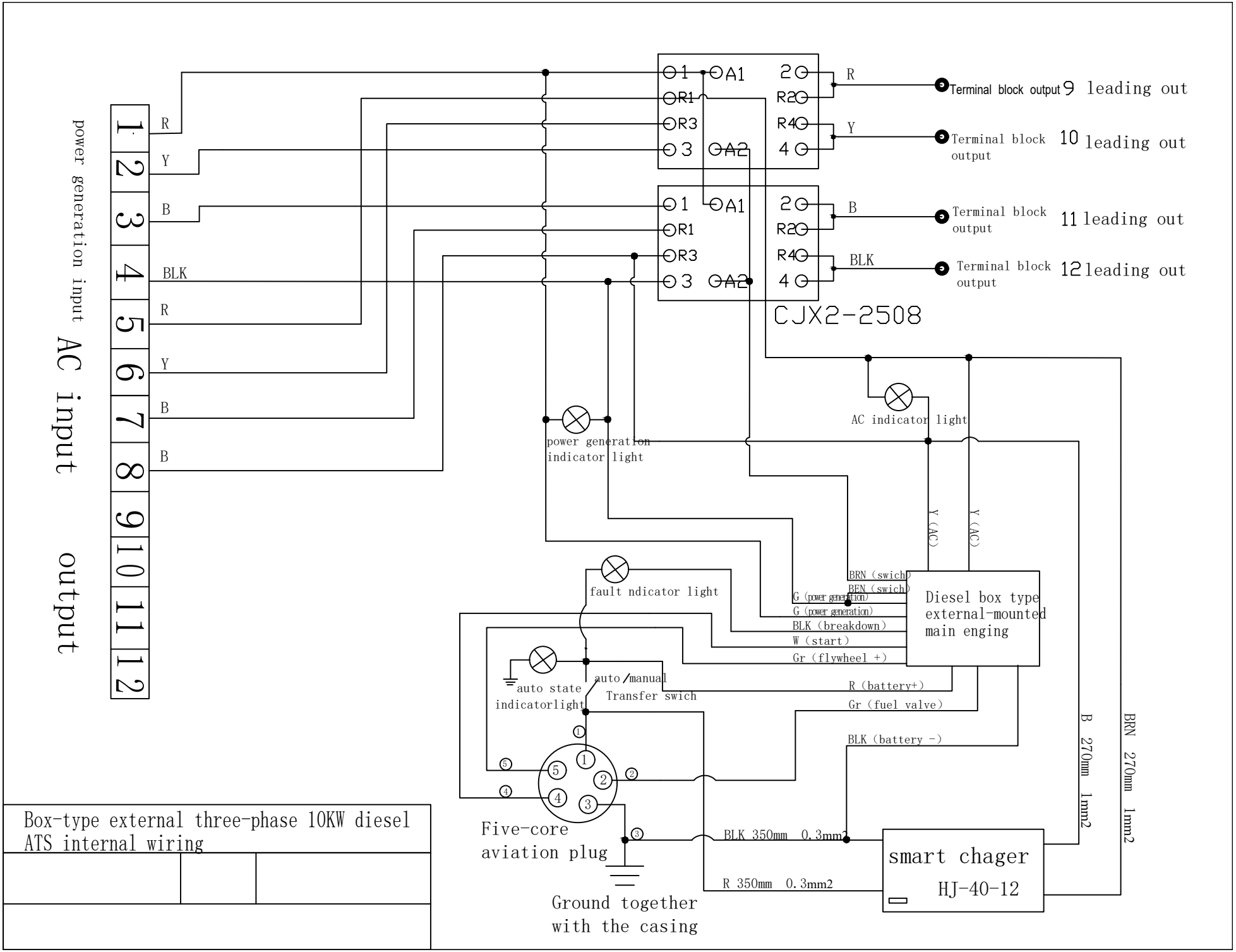

R:red
B:blue
BLK:black
Y:yellow
W:white
G:green
Gr:gray
BRN:brown

Box-type external three-phase 10KW diesel ATS internal wiring